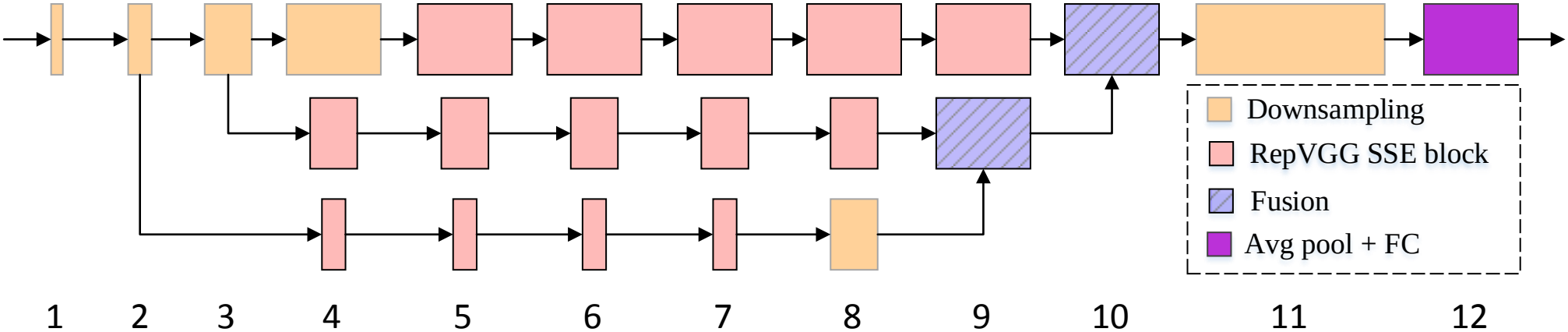
Downsampling
RepVGG SSE block
Fusion
Avg pool + FC
1
2
3
4
5
6
7
8
9
10
11
12